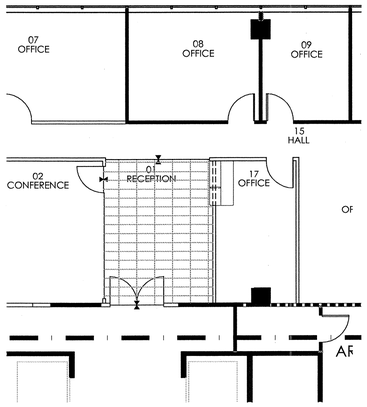

12 ALTERNATE Flooring Detail
Scale: 1/8"-1'-0"

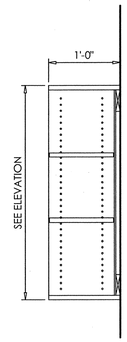

11 Section
Scale: 1"-1'-0"

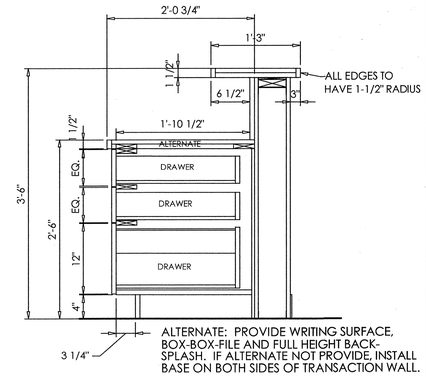

10 Section
Scale: 1"-1'-0"

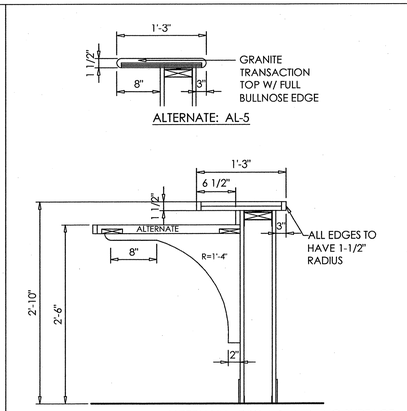

09 Section
Scale: 1"-1'-0"

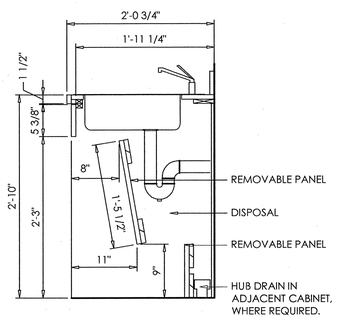

08 Section
Scale: 1"-1'-0"

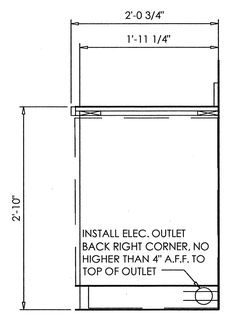

07 Section
Scale: 1"-1'-0"

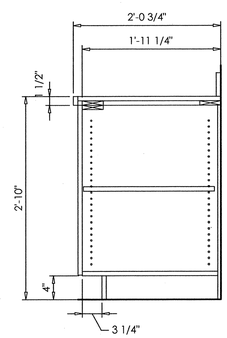

06 Section
Scale: 1"-1'-0"

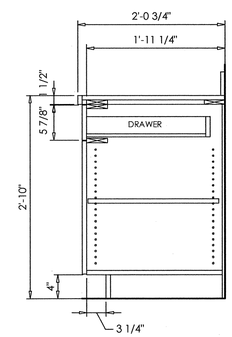

05 Section
Scale: 1"-1'-0"

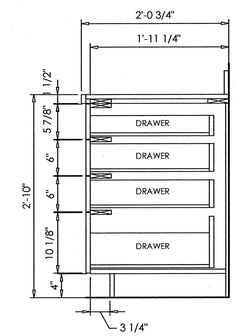

04 Section
Scale: 1"-1'-0"

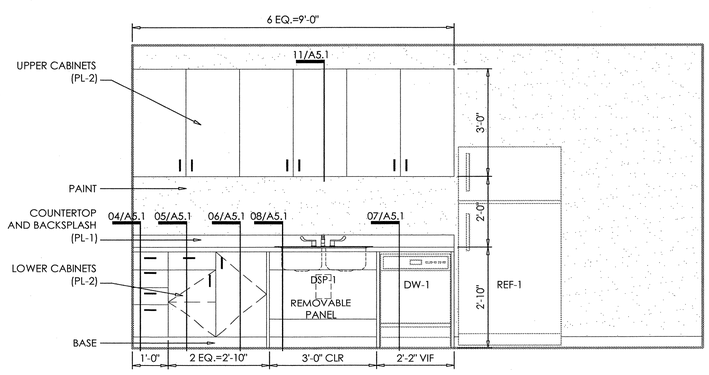

03 Elevation
Scale: 1/2"-1'-0"

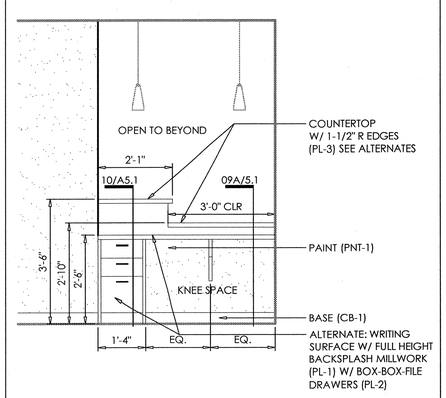

02 Elevation
Scale: 1/2"-1'-0"

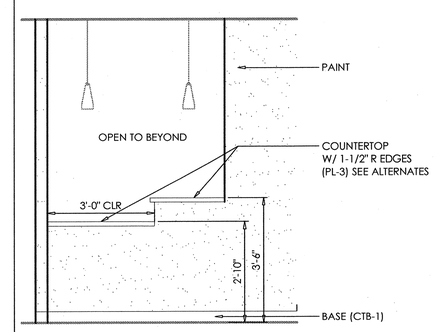

01 Elevation
Scale: 1/2"-1'-0"

ENTOS design
5400 LBJ Freeway
Suite 125
Dallas, Texas
75240
P. 972.770.2222
F. 972.770.2242
www.entosdesign.com

REGISTERED ARCHITECT BARRY ALAN MANNERS 12-27-09

All drawings and written materials appearing herein constitute original unpublished work, and may not be duplicated, used or disclosed without written consent of the ENTOS Design.

These drawings are assumed to be complete and final. It shall be the tenant/client's responsibility to review and bring in writing any design discrepancies to the designers' attention. Any design changes will be at additional expense. The designer shall not be held responsible for city, state and federal code/regulation authority's interpretations.

Approved: _____ Date: _____

No.	Issued	Date
	Construction Set	02/27/2009

Project
Phalon George

Location
Two Forest Plaza
12201 Merit Drive
Suite 700
Dallas, Texas 75251

Sheet Title
Elevations and Section

Sheet Number
A5.1

© 2009