REVISIONS:

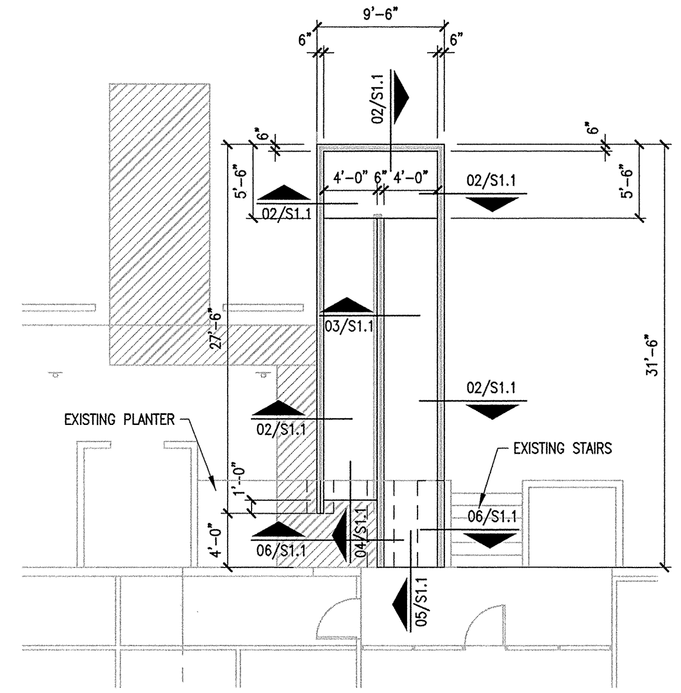

VERIFY SLOPES AND RISERS W/ARCH FIELD VERIFY ELEVATIONS PRIOR TO CONSTRUCTION.

01 LOCATION OF NEW OPENINGS AND RAMP PLAN

SCALE: 1/8"=1'-0"

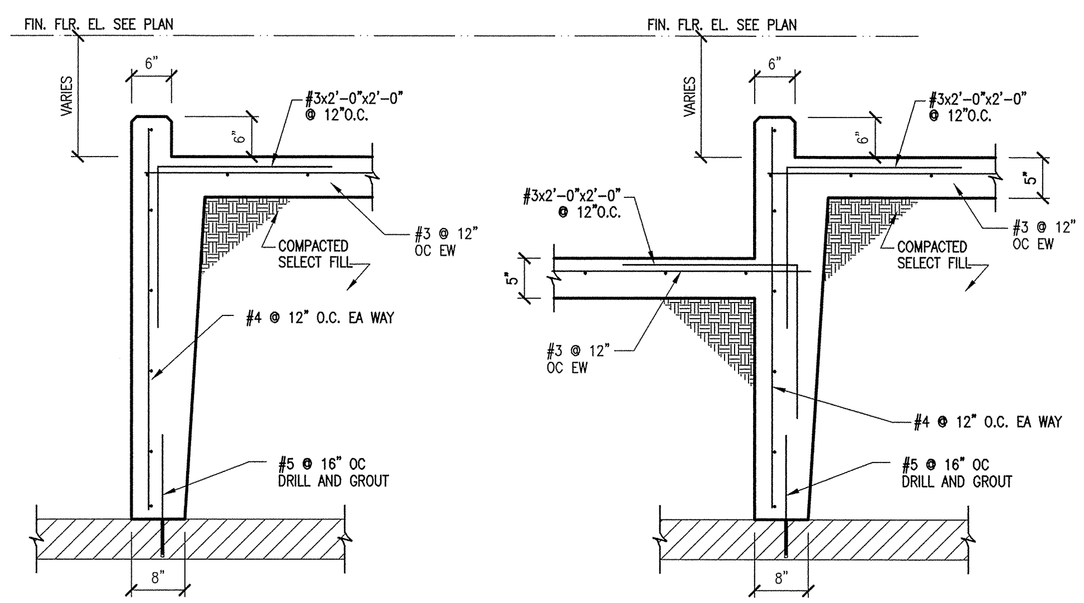

02 SECTION

03 SECTION

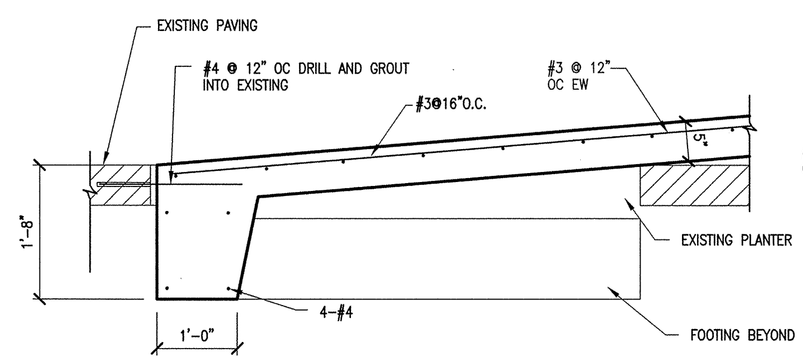

04 SECTION

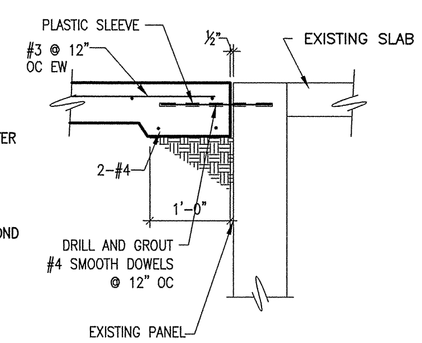

05 SECTION

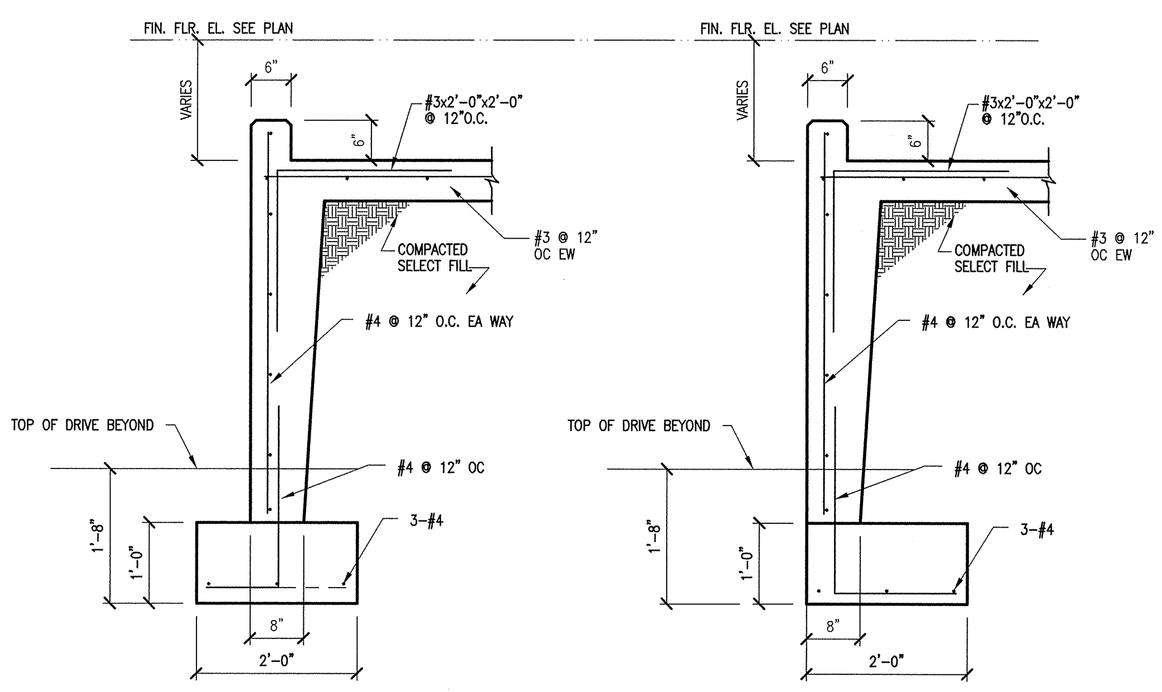

06 SECTION

07 SECTION

STRUCTURAL CONCRETE:

1. TYPICAL CONCRETE SHALL BE HARDROCK CONCRETE WITH A MINIMUM COMPRESSIVE STRENGTH AS SPECIFIED BELOW AT 28 DAYS. FIVE SACKS (470 LBS) MINIMUM OF CEMENT PER CUBIC YARD SHALL BE USED. READY-MIXED CONCRETE SHALL CONFORM TO ASTM C94. MIX DESIGN SHALL INCLUDE LOCATION WHERE CONCRETE IS TO BE USED.

SLAB-ON-GRADE 3000 PSI

2. CONCRETE SLUMPS SHALL BE FIVE INCHES MAXIMUM AND THREE INCHES MINIMUM. CONCRETE SLUMP FOR DRILLED PIERS SHALL BE FIVE INCHES MINIMUM AND SEVEN INCHES MAXIMUM.

3. PORTLAND CEMENT SHALL CONFORM TO ASTM C150. AGGREGATE SHALL CONFORM TO ASTM C33. MAXIMUM AGGREGATE SIZE SHALL BE ONE INCH.

4. ALL CONCRETE WORK SHALL BE DONE IN STRICT ACCORDANCE WITH THE LATEST A.C.I. SPECIFICATIONS.

5. ALL REINFORCING STEEL SHALL BE ASTM A615 GRADE 60.

6. REINFORCING STEEL SHALL BE DESIGNED, DETAILED, FABRICATED AND PLACED IN ACCORDANCE WITH THE LATEST A.C.I. "MANUAL OF STANDARD PRACTICE FOR DETAILING REINFORCED CONCRETE STRUCTURES" (A.C.I. 315) AND THE C.R.S.I. "RECOMMENDED PRACTICE FOR PLACING REINFORCING BARS", LATEST EDITION.

7. REINFORCEMENT SPLICES SHALL LAP A MINIMUM OF 40 BAR DIAMETERS OR 24 INCHES MINIMUM UNLESS OTHERWISE NOTED. BAR SPLICES AT LOCATIONS OF HIGH STRESS ARE NOT PERMITTED. SPLICES SHALL BE APPROVED BY THE STRUCTURAL ENGINEER.

8. PROVIDE SPACERS, CHAIRS, BOLSTERS, TIES AND OTHER ACCESSORIES CONFORMING TO THE REQUIREMENTS OF THE C.R.S.I.

9. NO CALCIUM CHLORIDE SHALL BE PERMITTED IN THE CONCRETE MIX.

10. A MAXIMUM OF 20% FLY ASH MAY BE INCORPORATED IN THE MIX DESIGN.

11. ALL FILL REQUIRED SHALL BE SELECT FILL WITH PI BETWEEN 5 AND 15 WITH A LIQUID LIMIT BETWEEN 32 AND 38. THE FILL SHALL BE COMPACTED IN EIGHT INCH LIFTS AND BE COMPACTED TO 95% STANDARD PROCTOR DENSITY.

STATE OF TEXAS
KEITH K. LESLIE
PE 41
STRUCTURAL ENGINEER
01/30/09

MAKE READY IMPROVEMENTS
ROYAL DISTRIBUTION CENTER

11414 MATHIS STREET

DALLAS, TEXAS

TECHNISTRUCTURES, INC.
STRUCTURAL ENGINEERING CONSULTANTS
5220 McKinney Avenue
Suite 300
Dallas, Texas 75205
214/528-1725 (FAX) 214/528-1728
TX. REG #F3593

MEINHARDT & ASSOCIATES ARCHITECTS, P.L.L.C.

PROJECT NO.

SHEET TITLE:

DRAWN BY: CHECKED BY:

ProLogis.

2310 LBJ freeway, Suite 200
Dallas, Texas 75234
Phone: 972-884-9292
Fax: 972-488-9848

DATE: SHEET:

S1.1