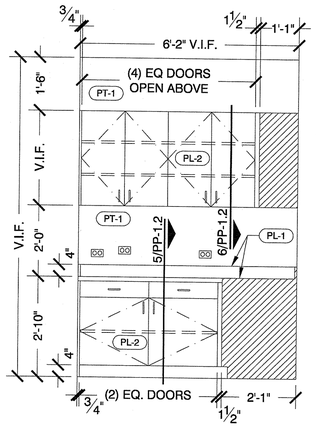

ELEVATION @ ROOM 403 — 1/2" = 1'-0" — 1

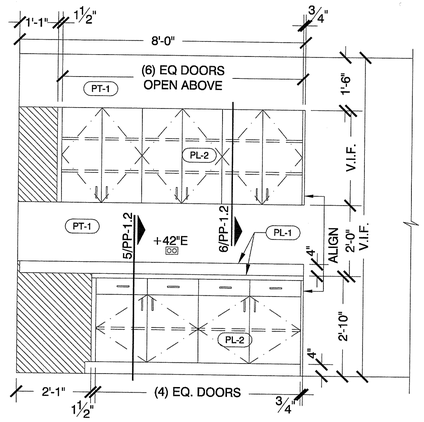

ELEVATION @ ROOM 403 — 1/2" = 1'-0" — 2

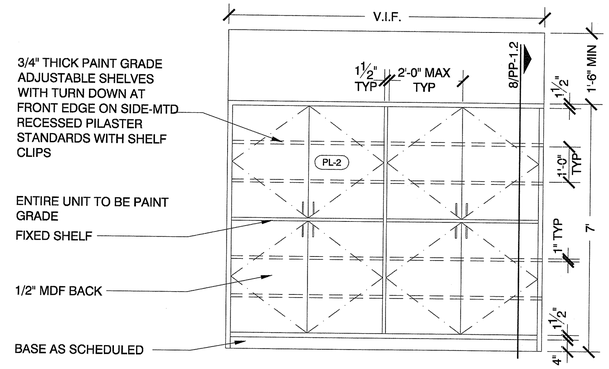

ELEVATION @ ROOM 404 — 1/2" = 1'-0" — 3

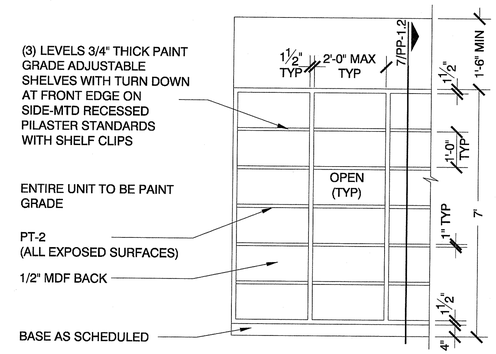

ELEVATION @ ROOM 404 — 1/2" = 1'-0" — 4

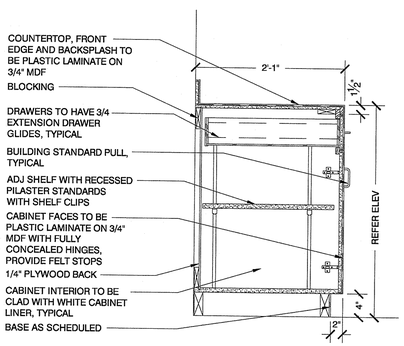

SECTION @ BASE — 1" = 1'-0" — 5

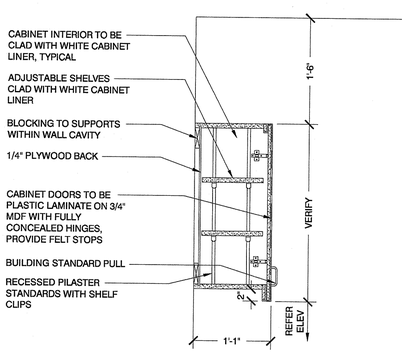

SECTION @ UPPERS — 1" = 1'-0" — 6

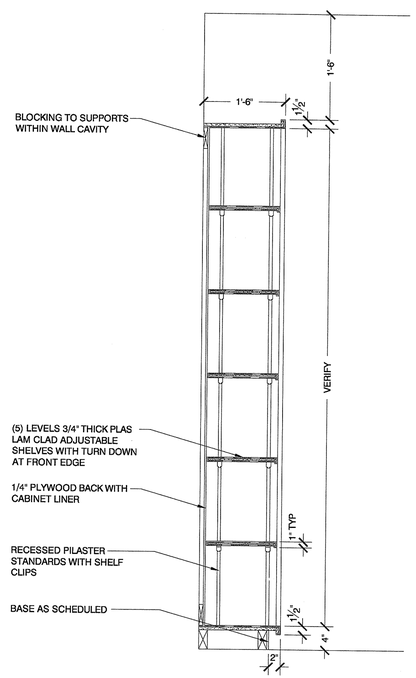

SECTION @ CABINETS — 1" = 1'-0" — 7

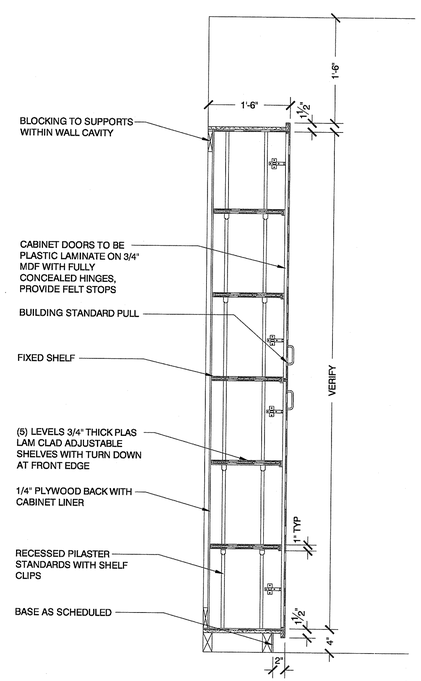

SECTION @ CABS. WITH DOORS — 1" = 1'-0" — 8

DOOR AND FRAME SCHEDULE

SYMBOL	SPECIFICATION
	6" CLEAR TO DOOR OPENING UNLESS OTHERWISE NOTED DOOR TYPE HARDWARE TYPE
A	BUILDING STANDARD 3'-0"W INTERIOR DOOR AND FRAME. DOOR TO BE BUILDING STANDARD HEIGHT AND RECEIVE BUILDING STANDARD FINISH.
B	BUILDING STANDARD 3'-0"W INTERIOR DOOR AND FRAME WITH XX" WIDE x X" CLEAR TEMPERED GLASS SIDELIGHT. DOOR AND FRAME TO BE BUILDING STANDARD HEIGHT AND RECEIVE BUILDING STANDARD FINISH.
C	BUILDING STANDARD 3'-0"W CORRIDOR DOOR AND FRAME. DOOR TO BE BUILDING STANDARD HEIGHT AND RECEIVE BUILDING STANDARD FINISH.
D	PAIR OF BUILDING STANDARD 3'-0"W CORRIDOR DOORS (6'-0" W OPENING) AND FRAME. DOORS TO BE BUILDING STANDARD HEIGHT AND RECEIVE BUILDING STANDARD FINISH.
E	PAIR OF BUILDING STANDARD 3'-0"W INTERIOR DOORS (6'-0" W OPENING) AND FRAME. DOORS TO BE BUILDING STANDARD HEIGHT AND RECEIVE BUILDING STANDARD FINISH.
F	BUILDING STANDARD 3-0"W CLEAR GLASS DOOR WITH TEMPERED GLASS. DOOR TO BE BUILDING STANDARD HEIGHT.
G	PAIR OF BUILDING STANDARD 3-0"W CLEAR GLASS DOORS (6'-0" W OPENING) WITH TEMPERED GLASS. DOORS TO BE BUILDING STANDARD HEIGHT.
H	EXISTING DOOR TO REMAIN.

DOOR HARDWARE SCHEDULE

SYMBOL	SPECIFICATION
a	1 PASSAGE SET BLDG. STD. HINGES 1 BLDG. STD. DOOR STOP 1 BLDG. STD. FRAME SILENCER
b	1 PASSAGE SET BLDG. STD. HINGES 1 BLDG. STD. DOOR STOP 1 BLDG. STD. FRAME SILENCER 1 CLOSER
c	1 OFFICE LOCK SET BLDG STD. HINGES 1 BLDG. STD. DOOR STOP 1 BLDG. STD. FRAME SILENCER 1 BLDG. STD. COAT HOOK
d	1 OFFICE LOCK SET BLDG STD. HINGES 1 BLDG. STD. DOOR STOP 1 BLDG. STD. FRAME SILENCER 1 CLOSER
e	2 PASSAGE SETS BLDG. STD. HINGES 2 BLDG. STD. DOOR STOPS 2 BLDG. STD. FRAME SILENCERS
f	2 OFFICE LOCK SETS BLDG STD. HINGES 2 BLDG. STD. DOOR STOPS 2 BLDG. STD. FRAME SILENCERS
g	2 OFFICE LOCK SETS BLDG STD. HINGES 2 BLDG. STD. FRAME SILENCERS 2 CLOSERS
h	1 ELECTRONIC STRIKE 1 CARD KEY ACCESS SYSTEM 1 POWER SOURCE EXISTING DOOR LOCKSET / HARDWARE
i	EXISTING HARDWARE TO REMAIN.

GENERAL DOOR NOTES:

1. ALL DOORS TO BE UNDERCUT 1/2" U.O.N.

2. ALL DOORS, FRAMES & SIDELIGHTS TO MATCH BUILDING STANDARDS.

3. PROVIDE DOOR FINISH SAMPLE TO BLDG. MGMT. FOR REVIEW AND APPROVAL PRIOR TO ORDERING.

GENERAL HARDWARE NOTES:

1. HARDWARE TO BE BUILDING STANDARD "LEVER" TYPE ADA/TAS COMPLIANT, U.O.N. COORDINATE WITH BUILDING MANAGEMENT.

2. CLOSERS TO BE ADJUSTED TO MEET ADA/TAS STANDARDS. DOORS SHALL CLOSE FROM AN OPEN POSITION OF 70 DEGREES TO A POINT 3" FROM LATCH IN A MINIMUM OF (3) THREE SECONDS AND SHALL REQUIRE A MAXIMUM OF (5) POUNDS OF FORCE (lbf) TO OPEN.

3. KEYS: LOCKSETS TO ALL ROOMS TO BE KEYED TO MASTER. CONTRACTOR TO COORDINATE WITH BLDG. MGMT. FOR QUANTITY OF MASTER SETS TO BE PROVIDED.

4. KEYWAY: COORDINATE WITH BUILDING MANAGEMENT FOR MASTER KEY AND GRANDMASTER KEY SYSTEM COMPLIANCE.

5. ALL ELECTRICAL DOOR HARDWARE AND ACCESSORIES FOR INFORMATION ONLY. COORDINATE WITH SECURITY CONSULTANT AND BLDG. MGMT. FOR FINAL SELECTION.

6. ALL DOOR HARDWARE AND ACCESSORIES TO MATCH BUILDING STANDARDS, U.O.N.

7. COAT HOOKS TO BE MOUNTED AT 48" HIGH (MAXIMUM), CENTERED ON BACK OF DOOR. CONTRACTOR TO ENSURE DOOR WILL STOP CLEAR OF HITTING COAT HOOK BEHIND DOOR. COORDINATE WITH FLOOR STOP SPECIFIED.

idGROUP
2641 IRVING BLVD.
DALLAS, TEXAS 75207
TEL: 214-638-6800 FAX: 214-689-0301

SEAL

Kylie Kulwicki 11.10.08

PROJECT NO.: 31-46
DRAWN BY: WAP
CHECKED BY: MP/KD
U.S.F.: 1,979 (IECC)
R.S.F.: 2,290

TWO FOREST PLAZA

ERICKSON PARTNERS

12201 MERIT DRIVE
SUITE # 480
DALLAS, TEXAS

NO.	ISSUED FOR:	DATE:
1	REVIEW/PRICING	10-08-08
2	PERMIT	11-10-08

DRAWING TITLE:
SHEET 3 OF 3

DRAWING NUMBER:

PP-1.2

© 2008 ID Group