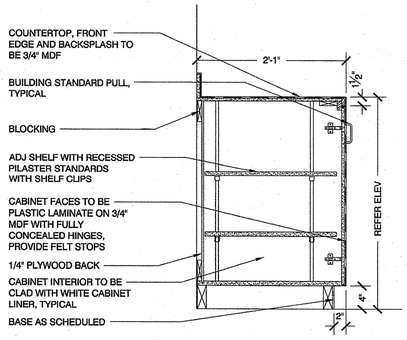

SEC. @ BASE CABINETS 1"=1'-0" (1)

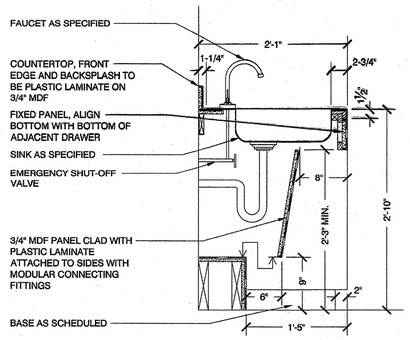

SEC. @ BREAK RM. SINK 1"=1'-0" (2)

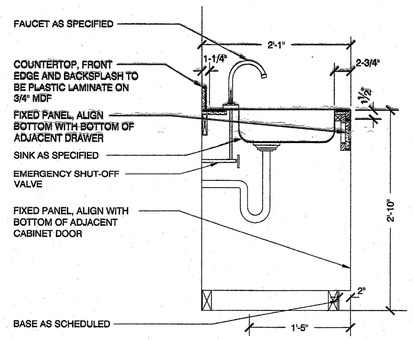

SEC. @ EXAM SINK 1"=1'-0" (3)

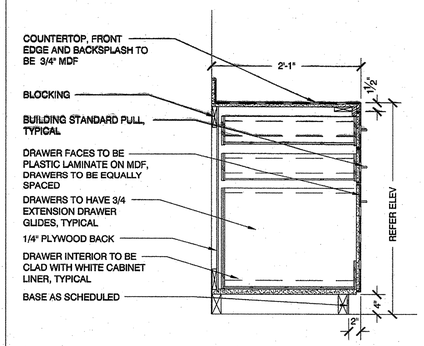

SEC. @ FILE CABINETS 1"=1'-0" (4)

idGROUP

2641 IRVING BLVD.
DALLAS, TEXAS 75207
TEL: 214-638-6800 FAX: 214-689-0301

SEAL

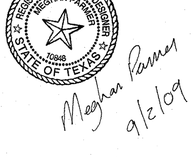

Meghan Parmer
9/2/09

PROJECT NO.: 75-115
DRAWN BY: MEP/WAP
CHECKED BY: KD
U.S.F.: 3,848
R.S.F.: 4,588

COMMERCE PLAZA HILLCREST

DERMATOLOGY ASSOCIATES

12850 HILLCREST
SUITE F200
DALLAS, TEXAS

NO.	ISSUED FOR:	DATE:
1	REVIEW	08.03.09
2	PRICING	08.31.09
3	PERMIT	09.02.09

DRAWING TITLE:

DETAILS
& SECTIONS

DRAWING NUMBER:

A6.2

© 2009 ID Group