© COPYRIGHT 2005 - ALLIANCE ARCHITECTS

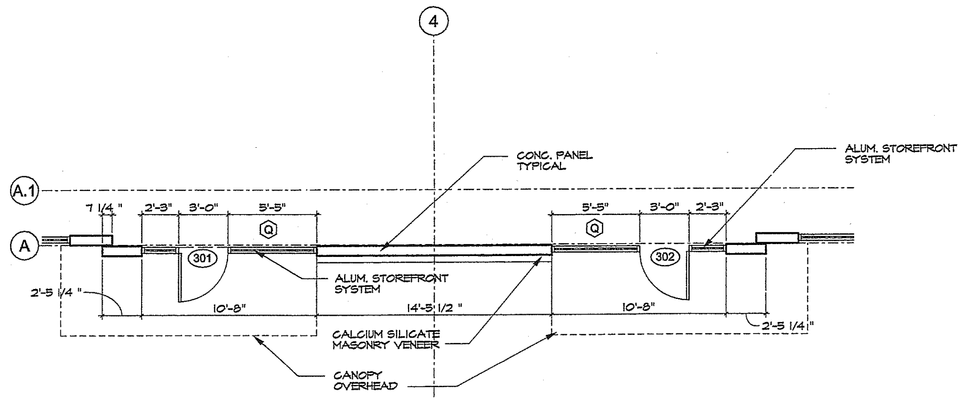

PLAN NORTH

03 ENLARGED ENTRY PLAN
SCALE: 3/16" = 1'-0"

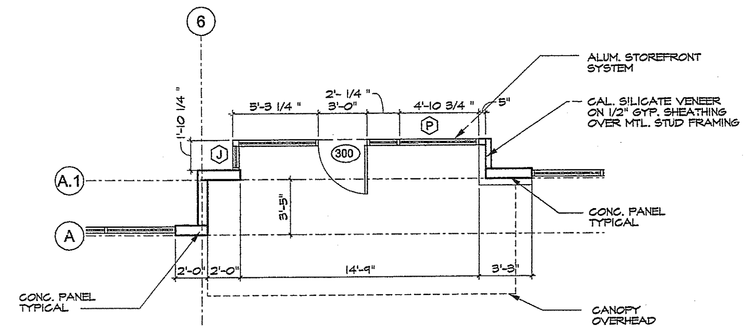

PLAN NORTH

02 ENLARGED ENTRY PLAN
SCALE: 3/16" = 1'-0"

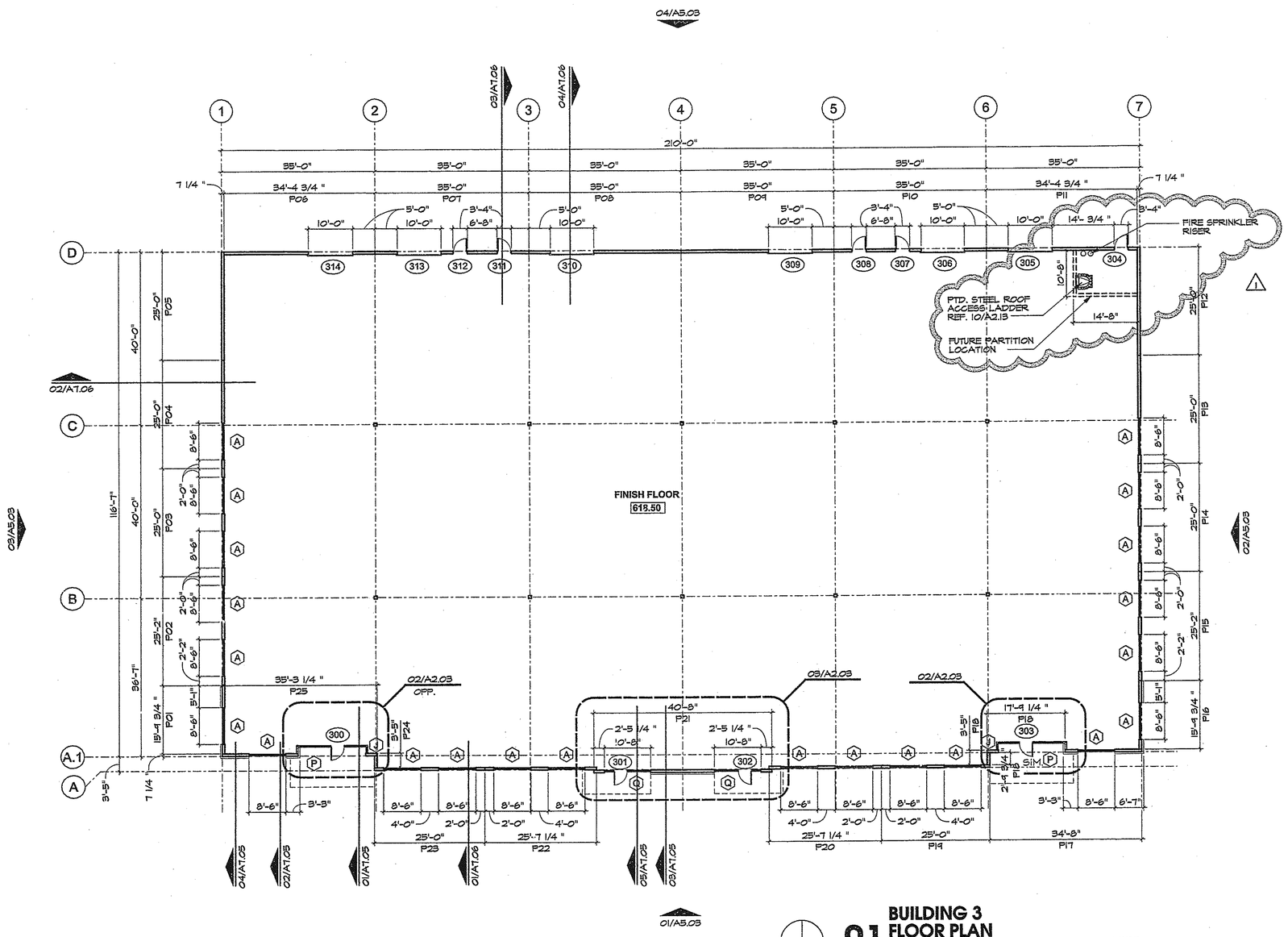

PLAN NORTH

01 BUILDING 3 FLOOR PLAN
SCALE: 1/16" = 1'-0"

ALLIANCEARCHITECTS

1600 N. Collins Blvd., Suite 1000
Richardson, Texas 75080

(972) 233-0400
Fax: (972) 233-2259

The Campus At

CASCADES

Phase One

JACKSON·SHAW

PROJECT RECORD DRAWINGS

BUILDING 3
FLOOR PLAN

REVISIONS:

	CONSTRUCTION ISSUE 01/26/07
1	ASI NO.003 05/15/07

PROJECT NO.: 24235

A2.03

DATE: NOV. 3, 2006

...\cas 03 A203fp.dgn 5/17/2007 2:51:30 PM